positioning
patients for life.®

PRODUCT GUIDE & USER MANUAL

RT-4489KW, RT-4489KW-01 & RT-4489FB

SofTouch™ Knee Wedge and Foot Block



Qfix | 440 Church Road | Avondale, Pennsylvania 19311 USA | +1 610-268-0585 | +1 610-268-0588 | www.Qfix.com

CE

EC REP	Advena Limited Tower Business Centre, 2nd Flr Tower Street, Swatar, BKR 4013 Malta

Made in the USA by
Qfix
440 Church Rd, Avondale, Pennsylvania, USA
+1 610-268-0585 www.Qfix.com

SofTouch is a trademark of Qfix.

Exact® is a registered trademark of Varian Medical Systems.

Cidex® & Windex® are registered trademark of Johnson & Johnson.

Clorox® is a registered trademark of The Clorox Company.

TABLE OF CONTENTS

GENERAL PRECAUTIONS 4

WARNING STATEMENTS 4

SERIOUS INCIDENTS 4

WARNING LABELS & DESCRIPTIONS 4

INTENDED USE 5

FEATURES 6

COMPONENTS 6

OPERATING INSTRUCTIONS 7

INSTALLATION 7

REMOVAL 8

MAINTENANCE 9

CLEANING THE SYSTEM 9

DISINFECTING THE SYSTEM 9

PARTS LIST 10

SETUP SHEET 11

SOFTOUCH™ KNEE WEDGE AND FOOT BLOCK 11

GENERAL PRECAUTIONS

WARNING STATEMENTS

! WARNING ! NO MODIFICATION OF THIS EQUIPMENT IS ALLOWED. IF ANY PART OF THIS DEVICE EXPERIENCES A CATASTROPHIC LOAD, APPEARS DAMAGED OR FUNCTIONS IMPROPERLY, DISCONTINUE USE IMMEDIATELY AND CONTACT QFIX AT +1 484-720-6054 OR TECHSUPPORT@QFIX.COM.

! NOTE ! The SofTouch devices must be full supported by the couch top surface at all times.

! NOTE ! DO NOT place sharp objects on the SofTouch devices.

SERIOUS INCIDENTS

Please report any serious incidents (e.g. incidents which result in or have the potential to result in death or serious injury) to both Qfix and your country's Competent Authority.

WARNING LABELS & DESCRIPTIONS

Refer to Qfix.com for a listing of symbols and their definitions.

Qfix | 440 Church Road | Avondale, Pennsylvania 19311 USA | +1 610-268-0585 | +1 610-268-0588 | www.Qfix.com

INTENDED USE

This device is intended to immobilize, position and reposition patients undergoing radiation therapy.

! NOTE ! United States Federal law restricts this device to sale by or on the order of a physician.

PATIENT TARGET GROUPS

Patient's undergoing radiation therapy or diagnostic imaging procedures.

INTENDED USERS

The intended user for the products is a person qualified in accordance with the requirements of the regulatory region.

FEATURES

COMPONENTS

1. SOFTOUCH™ KNEE WEDGE

The SofTouch Knee Wedge is designed to provide precise, repeatable positioning and is contoured to relieve pressure point stress and improve patient comfort. It is lightweight and easy to clean. It can accept clip-on leg straps, has a laser centering groove, easy to carry handles, and a cut-out for an ERB syringe. The Knee Wedge comes in two sizes, large and small.

2. SOFTOUCH™ FOOT BLOCK

The SofTouch Foot Block is designed to provide precise, repeatable positioning and is contoured to relieve pressure point stress and improve patient comfort. It is lightweight and easy to clean. It can accept clip-on leg straps, and easy to carry handles.

3. INDEXING PLATES

The SofTouch devices contain Indexing Plates attached to them which locate to any device with Varian Exact® compatible index notches using a 2-pin locating bar.

4. KNEE AND LEG STRAP ATTACHMENT

Clip-on leg straps may be attached for extra stability.

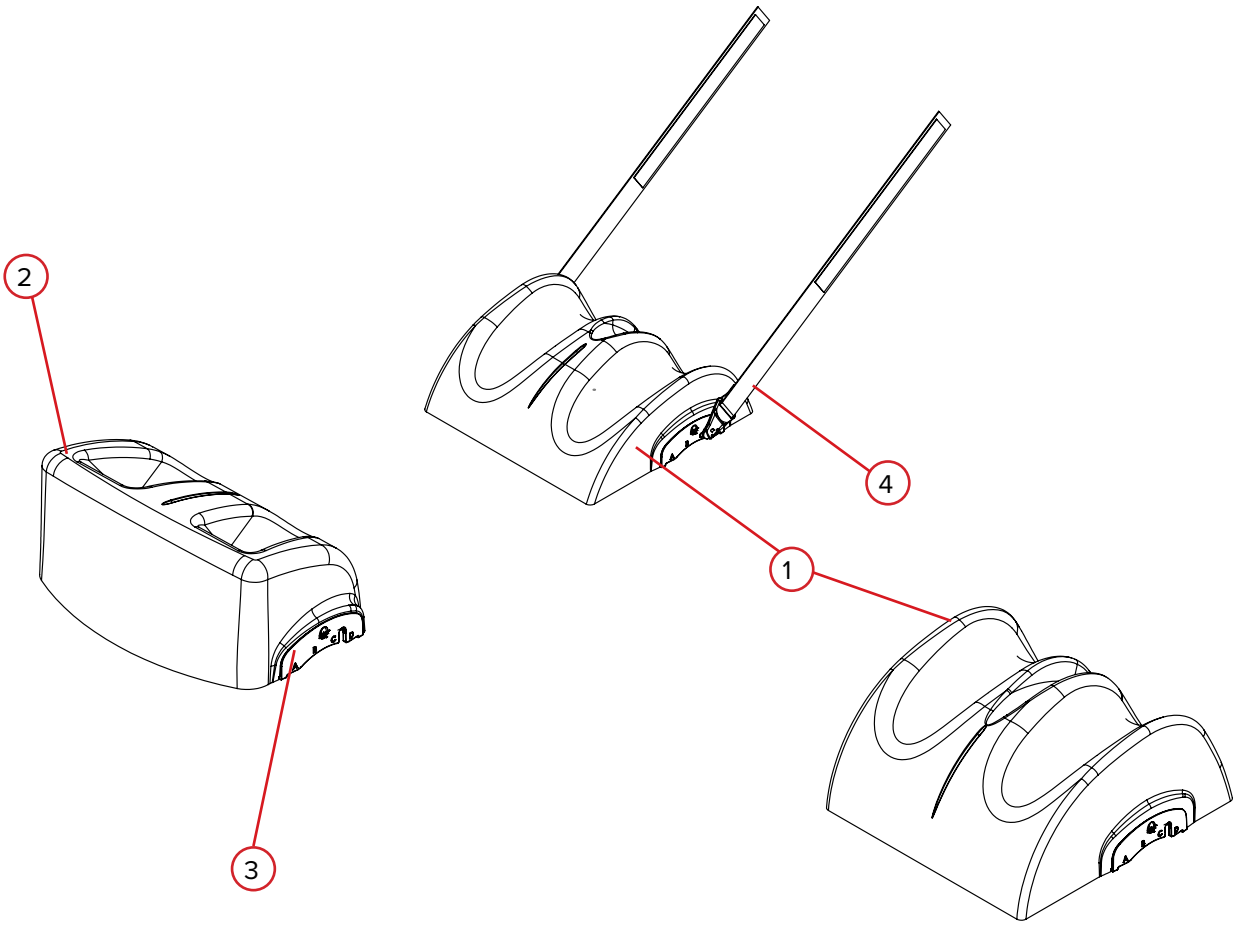

Qfix | 440 Church Road | Avondale, Pennsylvania 19311 USA | +1 610-268-0585 | +1 610-268-0588 | www.Qfix.com

OPERATING INSTRUCTIONS

INSTALLATION

SOFTOUCH™ DEVICE INSTALLATION

1. Insert the ends of the 2-pin locating bar into the Varian Exact® compatible index notches on the couch top, and snap the locating bar into place. (Fig. 1 & Fig. 2).

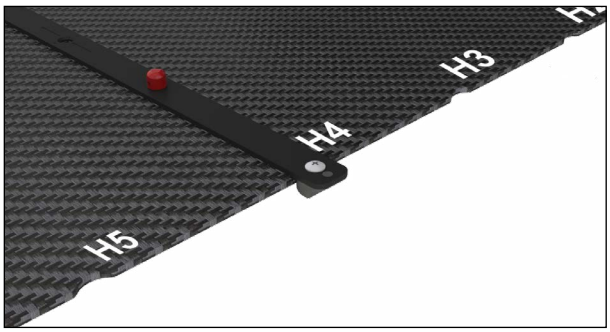

Fig. 1

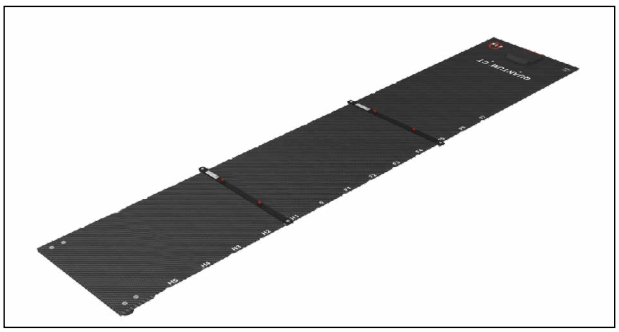

Fig. 2

2. Place the SofTouch device onto the couch top using the Indexing Plate to index to the 2-pin locating bar. (Fig. 3).

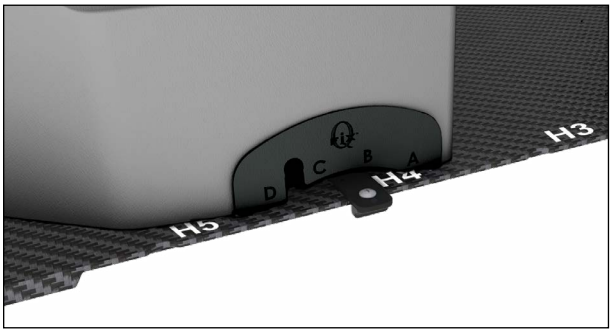

Fig. 3

OPERATING INSTRUCTIONS

INSTALLATION

LEG AND FOOT STRAP ATTACHMENT

1. To attach the Leg and Foot Strap Attachment to either the SofTouch Knee Wedge or Foot Block, align plastic locating boss on the attachment with the slot in the indexing plate.
2. Firmly push the boss into the slot until it snaps in place.

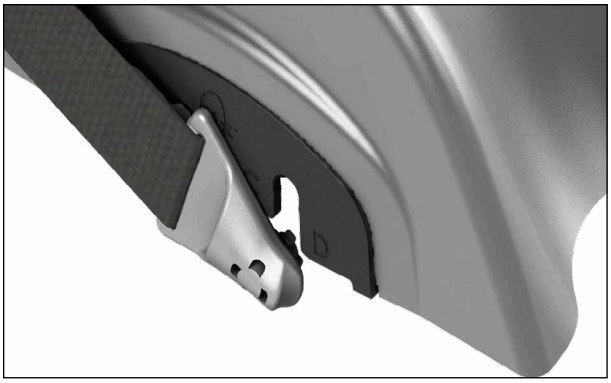

Fig. 4

REMOVAL

KNEE AND LEG STRAP REMOVAL

To remove the Knee and Leg Strap, push the plastic attachment piece downward until it snaps out of the slot.

SOFTOUCH™ DEVICE REMOVAL

To remove the SofTouch devices, lift them up and away from the locating bar and off of the couch top.

Qfix | 440 Church Road | Avondale, Pennsylvania 19311 USA | +1 610-268-0585 | +1 610-268-0588 | www.Qfix.com

MAINTENANCE

CLEANING THE SYSTEM

The device can be cleaned with a mild, non-abrasive cleaning or disinfecting solution. To clean, apply solution to clean cloth and wipe the surface.

DISINFECTING THE SYSTEM

The following cleaning materials have been tested and found to be appropriate for cleaning the SofTouch devices' surfaces. To disinfect the SofTouch devices' surface, refer to specific instructions from the cleaning agent manufacturer.

- Water
- A 10% Clorox® Bleach Solution
- Isopropyl Alcohol
- Cidex® 2.4% Activated Dialdehyde Solution

PARTS LIST

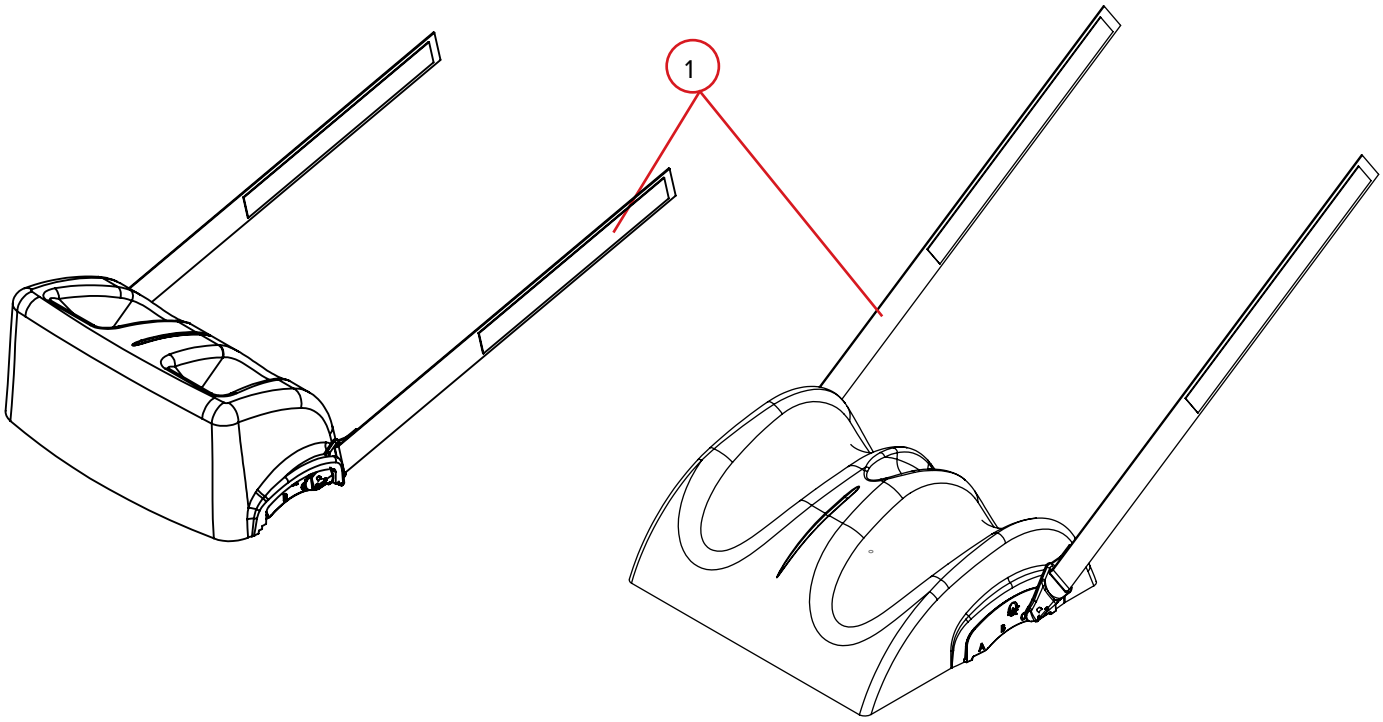

1. 8001863—Leg and Foot Strap Assembly

SETUP SHEET

SOFTOUCH™ KNEE WEDGE AND FOOT BLOCK

Patient Name:

Patient ID #: Setup by:

Physician: Date:

Comments:

RT-4489FB – SofTouch™ Foot Block

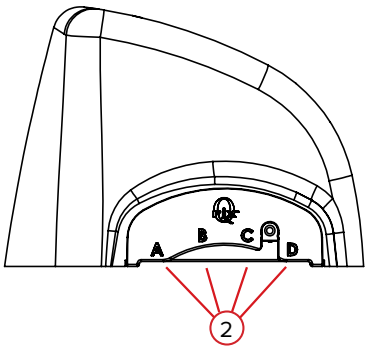

RT-4489KW – SofTouch™ Knee Wedge, Large

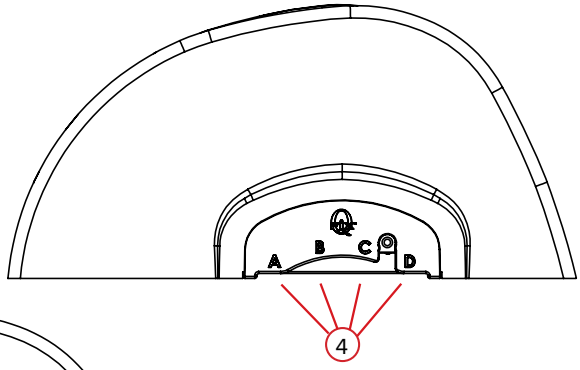

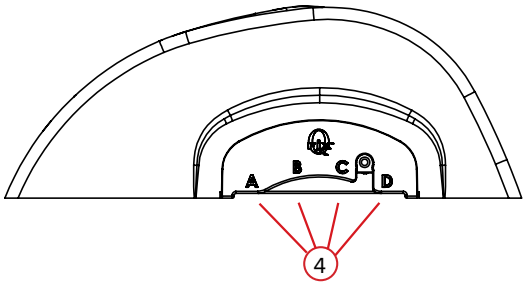

RT-4489KW-01 – SofTouch™ Knee Wedge, Small

SOFTOUCH™ FOOT BLOCK

1. Location of locating bar on couch top:

2. Location of SofTouch Foot Block on locating bar (choose one): **A** ☐ **B** ☐ **C** ☐ **D** ☐

SOFTOUCH™ KNEE WEDGE

3. Knee Wedge Used (choose one): **LARGE** ☐ **SMALL** ☐

4. Location of locating bar on couch top:

5. Location of SofTouch Knee Wedge on locating bar (choose one): **A** ☐ **B** ☐ **C** ☐ **D** ☐

440 Church Road
Avondale, PA 19311 USA
www.Qfix.com

+1 610.268.0585 / 800.526.5247

+1 610.268.0588 / 800.831.8174

sales@Qfix.com

2006968_EN_F
2020-12