ProForm™ Adjustable Backrests

TECHNICAL DATA SHEET

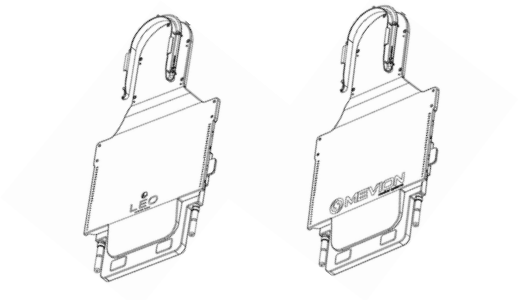

PRODUCT NAME	ProForm Adjustable Backrests for Leo Cancer Care and Mevion S250-FIT
PRODUCT NUMBER	**MTIL7115** Leo Cancer Care Systems **MTIL7116** Mevion S250-FIT System
GENERAL DESCRIPTION	ProForm HNS (Head, Neck & Shoulder) adjustable height backrest developed for use with Leo Cancer Care Systems and Mevion S250-FIT Systems.
INDICATIONS FOR USE	The device is used to assist with immobilization, positioning and repositioning of patients undergoing radiation therapy. The device is indicated to aid in supporting and positioning adult and pediatric patients undergoing radiation therapy, including electron, photon, and proton treatments. The device is also used during image acquisition to support treatment planning.
MR STATUS	Not intended for use in an MR environment.
INTEGRATION	Leo Cancer Care Systems Mevion S250-FIT System
FDA CLEARANCE	Yes
CE MARKED (EU DOC)	Yes
OTHER COUNTRY REGISTRATIONS	Available upon request
COUNTRY OF MANUFACTURE	USA

TECHNICAL DETAILS

PRODUCT NAME	ProForm Adjustable Backrest
PRODUCT NUMBER	MTIL7115, MTIL7116
PRIMARY MATERIALS	Foam composite, carbon fiber, plastics, aluminum, steel
WEIGHT (APPROX)	12 lbs
MAX PATIENT WEIGHT	Total system load maximum: 363 lb (165 kg) including accessories Do not exceed load to backrest of 51 lb (23.3 kg)* **Note: In an upright setup, most of the patient's weight rests on the seatpan*
DIMENSIONS (CM)	98.4 L x 54.2 W x 8.2 H

DOSIMETRIC PROPERTIES

PHOTON ATTENUATION

LOCATION	FIELD SIZE (CM^2)	ATTENUATION 6 MV PHOTONS	ATTENUATION 18 MV PHOTONS
Open beam (reference)	$10cm^2$	0%	0%
Head Area	$10cm^2$	1.76%	1.09%
H&N Extended (single layer)	$10cm^2$	1.58%	1.06%
H&N Down (double layer)	$10cm^2$	3.61%	2.22%

PROTON WET MEASUREMENTS

LOCATION	FIELD SIZE (CM^2)	R80 RANGE (MM)	WET (MM)
Open beam (reference)	$10cm^2$	155.30	--
Head Area	$10cm^2$	150.75 ± 0.05	4.55
H&N Extended (single layer)	$10cm^2$	150.80 ± 0.01	4.50
H&N Down (double layer)	$10cm^2$	146.10 ± 0.01	9.20

Performance Specifications are for reference only. Values may vary based on setup and equipment.

NOTE: MTIL7115 and MTIL7116 are equivalent to one another with respect to all technical and design characteristics; all measurements herein are identical across the two parts.

©2026 CQ MEDICA. ALL RIGHTS RESERVED. PROFORM IS A TRADEMARK OF CE MEDICAL. ALL OTHER TRADEMARKS ARE PROPERTY OF THEIR RESPECTIVE OWNERS. ALL PRODUCTS MAY NOT BE LICENSED IN ACCORDANCE WITH CANADIAN LAW.

TECHNICAL DRAWINGS

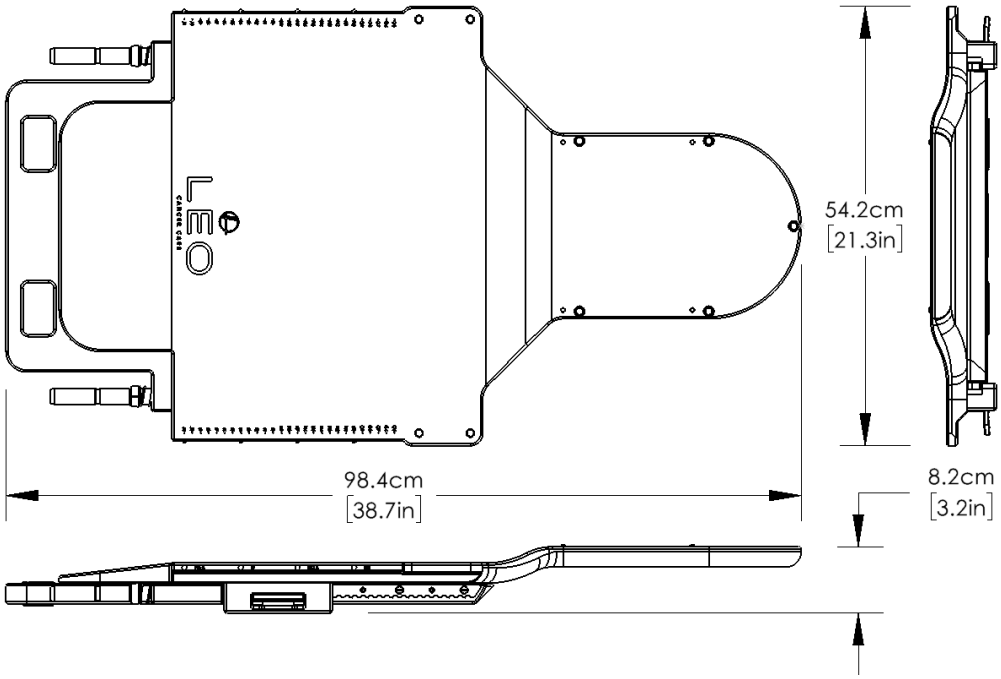

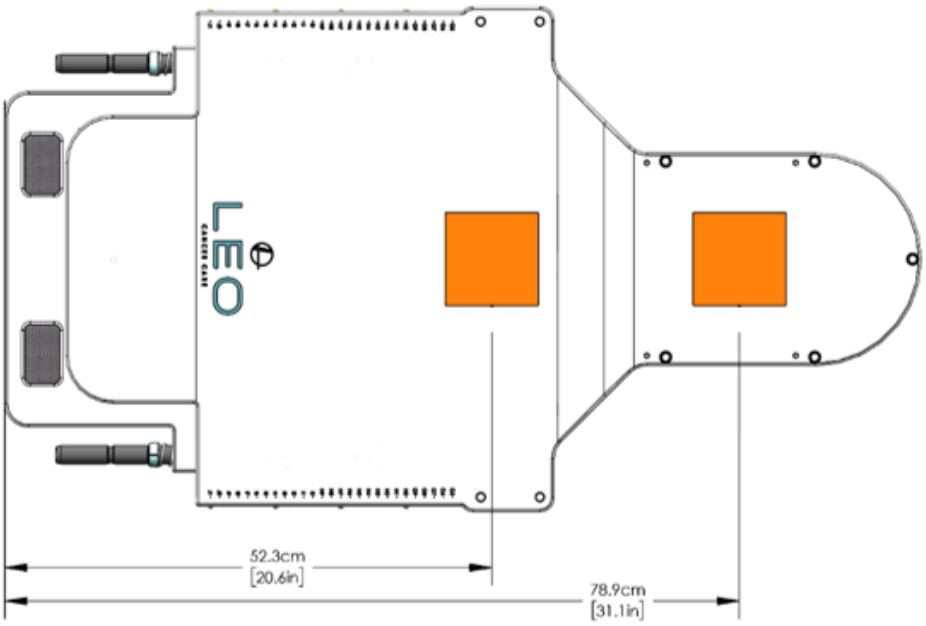

Figure 1. The regions for the WET and attenuation measurements.

©2026 CQ MEDICA. ALL RIGHTS RESERVED. PROFORM IS A TRADEMARK OF CE MEDICAL. ALL OTHER TRADEMARKS ARE PROPERTY OF THEIR RESPECTIVE OWNERS. ALL PRODUCTS MAY NOT BE LICENSED IN ACCORDANCE WITH CANADIAN LAW.

PACKAGING

UNIT PACK	Each
UNITS / BOX	1
SHELF LIFE	N/A
WARRANTY	See website for Product Warranty Statement
STERILIZATION	N/A
LAUNCH DATE	March 2025

ACCESSORIES

SYSTEM CUSTOMIZATION	**COMPATIBLE WITH:** Body Pro-Lok™ ONE Respiratory Belt (BPL026, BPL028) UCT Patient Handles (MTIL662501, MTIL662502) Upright Arm Positioner (RT-4900) ProForm™ Thermoplastics Accuform™ Cushions Registration Film (PRO340) ProForm Cushion Guide Bite Blocks Vacuum Bags

info@CQmedical.com | CQmedical.com

©2026 CQ MEDICA. ALL RIGHTS RESERVED. PROFORM IS A TRADEMARK OF CE MEDICAL. ALL OTHER TRADEMARKS ARE PROPERTY OF THEIR RESPECTIVE OWNERS. ALL PRODUCTS MAY NOT BE LICENSED IN ACCORDANCE WITH CANADIAN LAW.

CQ MEDICAL®